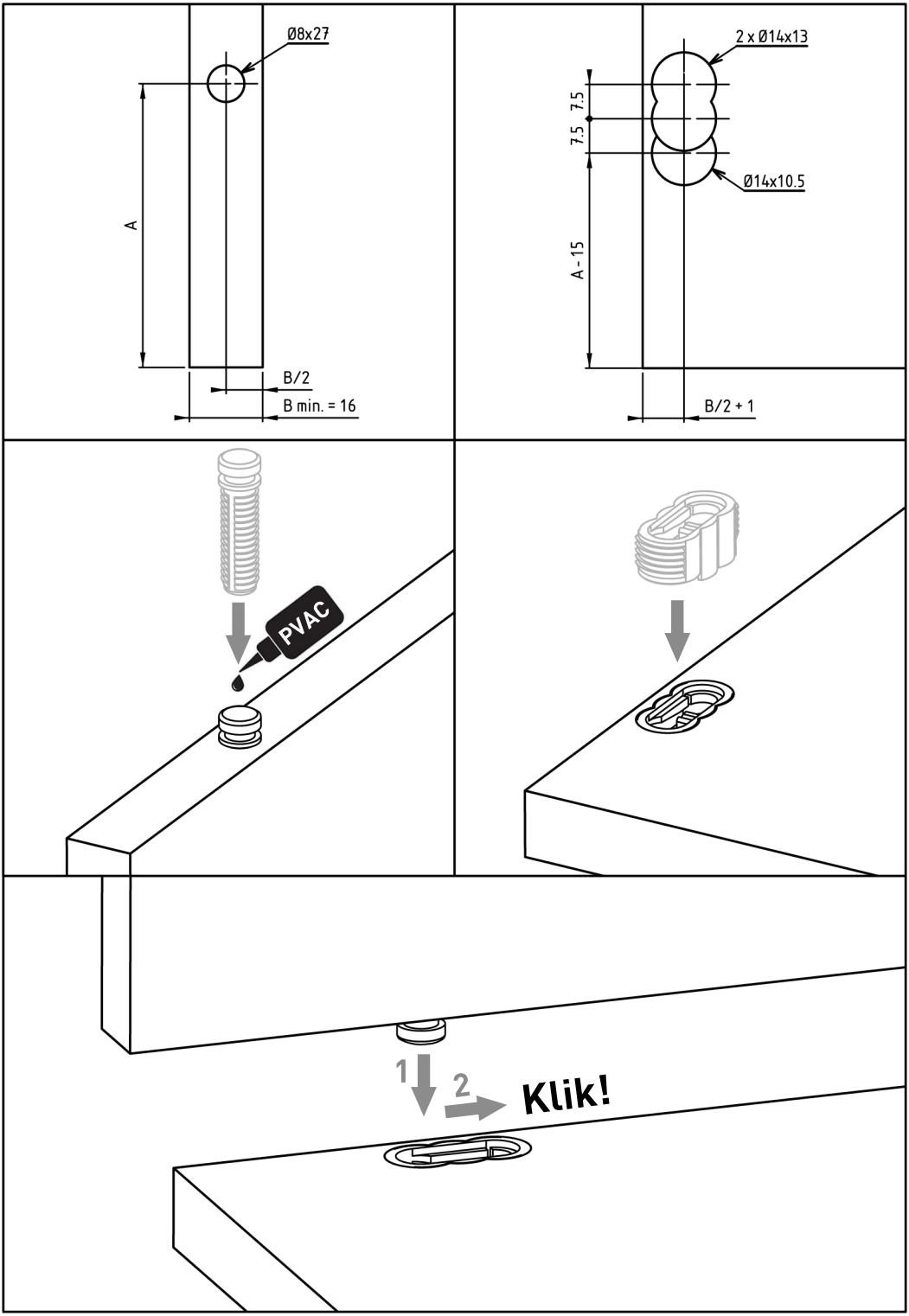
Ø8x27
A
B/2
B min. = 16
2 x Ø14x13
7.5
7.5
Ø14x10.5
A - 15
B/2 + 1
PVAC
1
2
Klik!